國 立 清 華 大 學 命 題 紙

九十二學年度 動力機械工程 系（所） 乙 組碩士班研究生招生考試

科目 電工學 科號 1402 共 5 頁第 1 頁 *請在試卷【答案卷】內作答

1. For a circuit shown below, if $V_{C1}(0_-) = 2v$, $V_{C2}(0_-) = 1v$, and the switch is closed at t = 0,
   (1) find the energy stored in C1 and C2 respectively at $t = 0_-$. (4 points)
   (2) find the current i(t) for t>0. (4 points)
   (3) find the total energy dissipated by the resistor R for t from 0 to ∞. (4 points)
   (4) find the energy stored in C1 and C2 respectively at t = ∞. (4 points)
   (5) find $V_{C1}(\infty)$ and $V_{C2}(\infty)$. (4 points)

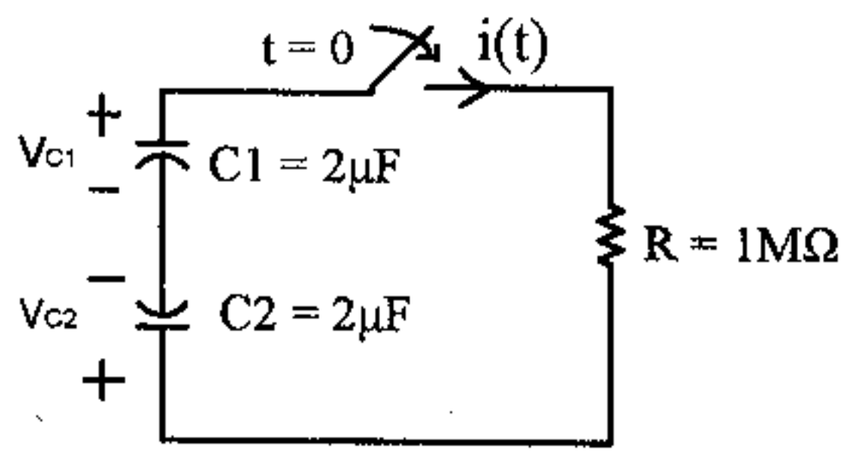

2. The following two circuits are equivalent. Find R_{TH} and V_{TH} by use of Thévenin Theorem. (10 points)

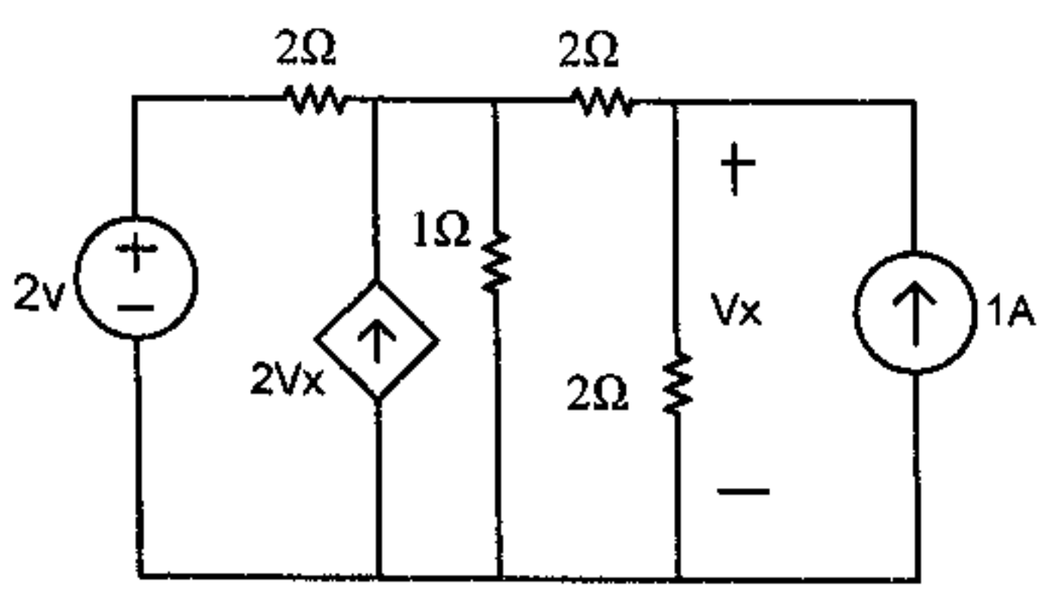

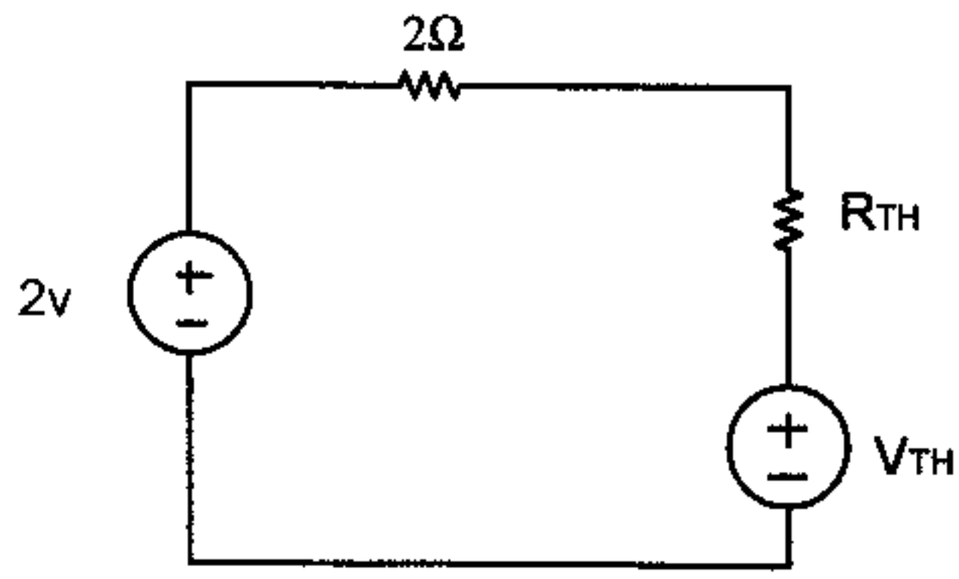

3. For the following circuit, if $V = 1\angle 0°$,

(1) find I_R, I_L, I_C, I and V_S. (5 points)

(2) draw the phasor diagram to verify your results in (1). (5 points)

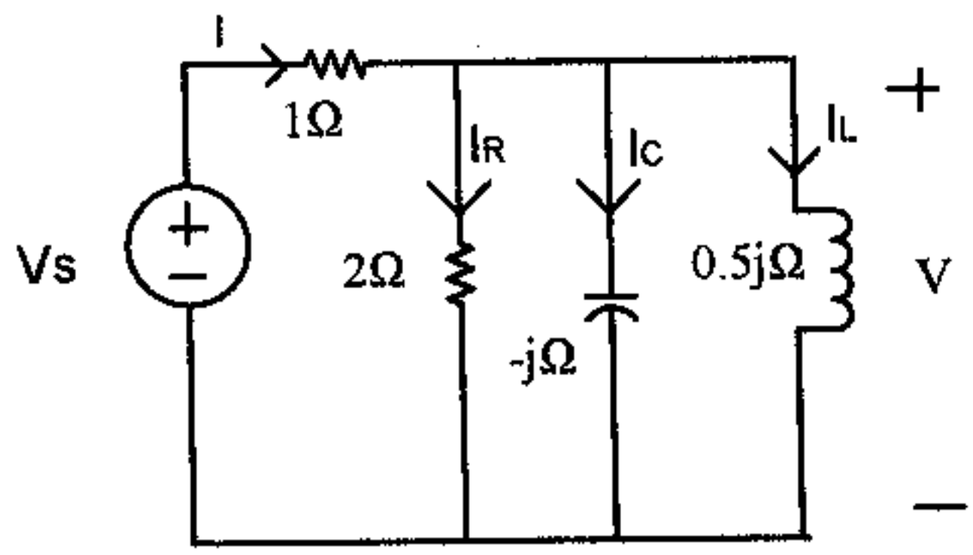

4. For the circuit below,

(1) find the impedance for every element in the circuit. (5 points)

(2) list the equations so that V_1 and V_2 can be solved by use of node-voltage method with nodes V_1 and V_2 given in the figure. (5 points)

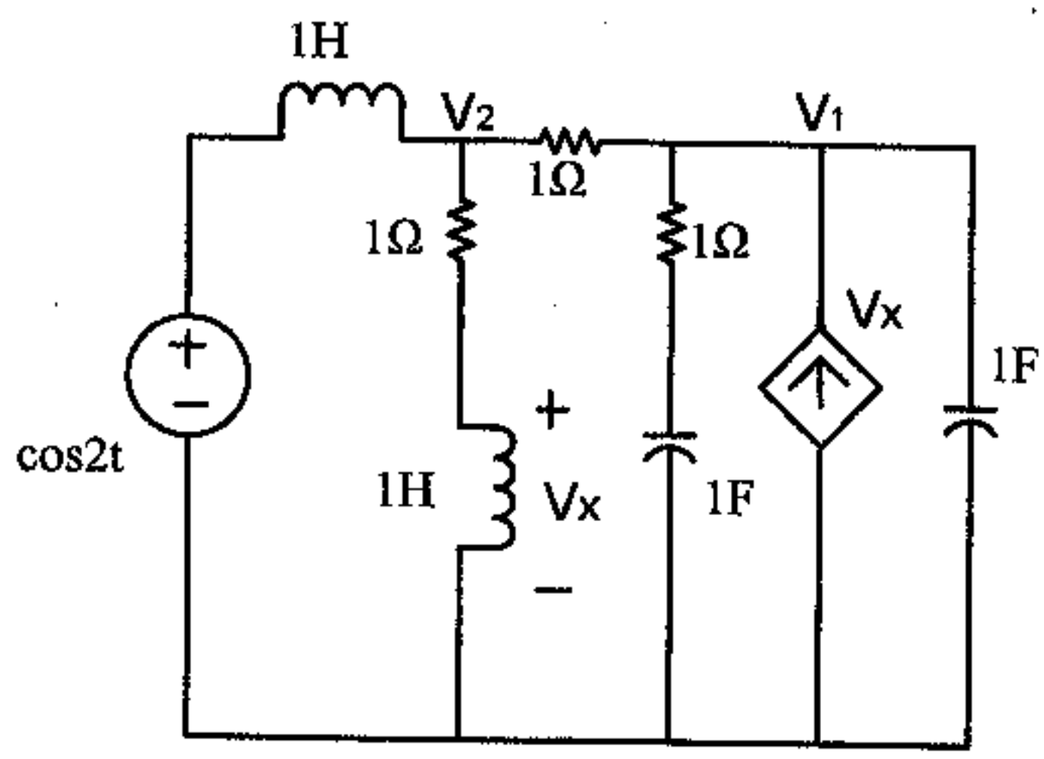

5. Answer the following questions that may have multiple choice. (15 points)
   (1) The basic structure of operational amplifiers made of bipolar integrated circuit technology consists of (a) differential amplifier, (b) gain stage, (c) compensation stage, (d) output stage.
   (2) The doping concentration level (N) of bipolar junction transistors is generally expressed as (a) $N_C>N_B>N_E$, (a) $N_E>N_B>N_C$, (c) $N_E>N_B=N_C$, (d) $N_E=N_B>N_C$.
   (3) Which of the following statements are not true for IC operational amplifiers? (a) Its open-loop gain is normally greater than 80 dB. (b) Its input impedance of the inverting and non-inverting terminals are small. (c) Its open-loop cut-off frequency response is larger than 10 MHz. (d) Its power supply can be single supply.
   (4) What is the Miller effect on a BJT amplifier ? (a) It is also called feedback effect. (b) It acts on the collector capacitance of BJT. (c) It limits the bandwidth of the BJT amplifier. (d) It has a (1+A) factor on the junction capacitance.
   (5) In Class-A power amplifier design, the maximum power efficiency could be used for thermal calculation is (a) 75%, (b) 30%, (c) 50%, (d) 100%.

6. Kevin's is a rookie in the design team with HyperDisc Inc.; and, his boss wants him to design an amplifier for the new DVD drive. Kevin picks up his college textbooks and lists some of the characteristics of BJT amplifiers as the followings.

BJT configuration	Voltage Gain	Input Impedance	Output Impedance
Common Emitter	A ≒ 1	Moderate	Low
Common Collector	A > 1	High	Moderate to High
Common Base	A > 1	???	Moderate to High
Common Emitter Cascode	A > 1	Moderate	Moderate to High

   (1) Please rearrange the sequence of the characteristics or fill the ??? to match the configuration of each BJT amplifier so that Kevin can make the right decision for his amplifier design work. (5 points)
   (2) If Kevin is going to use operational amplifiers for his prototype design, what are the basic assumptions and operational criterion Kevin has to make? Please answer the above question based upon the following tips. (5 points)
   (a) Open-loop DC gain. (b) Open-loop Bandwidth. (c) Input Impedance. (d) Power supplies. (e) Power losses.

7. Layout schematic of a simple inverting Op-Amp and calculate its voltage gain. (4 points)

8. For a given pn junction, answer the following questions.
   (1) Explain the I-V relation of the built-in potential of pn junctions. (2 points)
   (2) Calculate the built-in potential of a silicon pn junction. Consider the pn junction operating at T = 300°K, which has the doping density of phosphorus (10^{18} cm^{-3}) and the doping density of boron (10^{16} cm^{-3}). (2 points)

9. Please classify the states of BJT using the following schematic.
   (1) Which states function like current-controlled current source (CCCS), an open switch and a closed switch, respectively? (3 points)
   (2) Outline the regions of each state on the following schematic. Also, please point out the point of turn-on bias V_γ. (5 points)

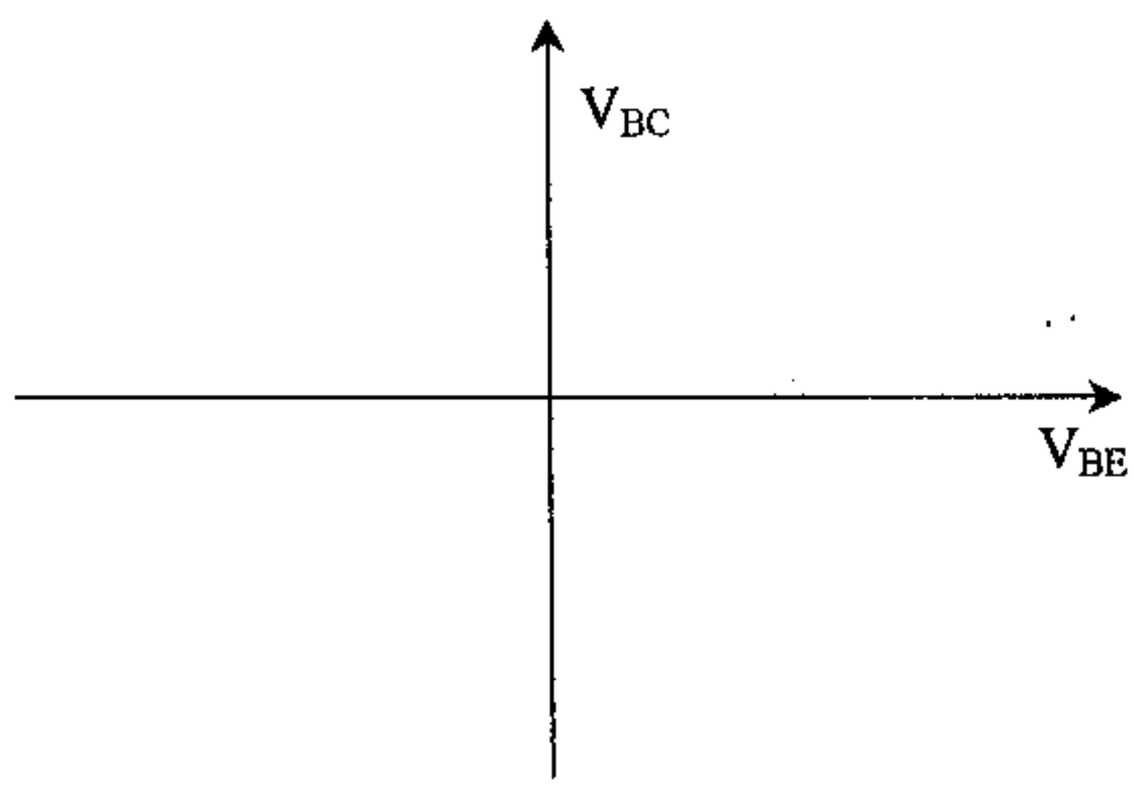

10. Given the properties of MOSFET M1, including $k = 1.0mA/V^2$ and $V_t = 1.8V$. Find resistor values for the following circuit so that $V_G = 1V$, $V_D = 10V$, $I_D = 6mA$. (9 points)